Date:	Company:
SSL Branch:	Job Name:
SSL Sales Person:	Purchase Order:

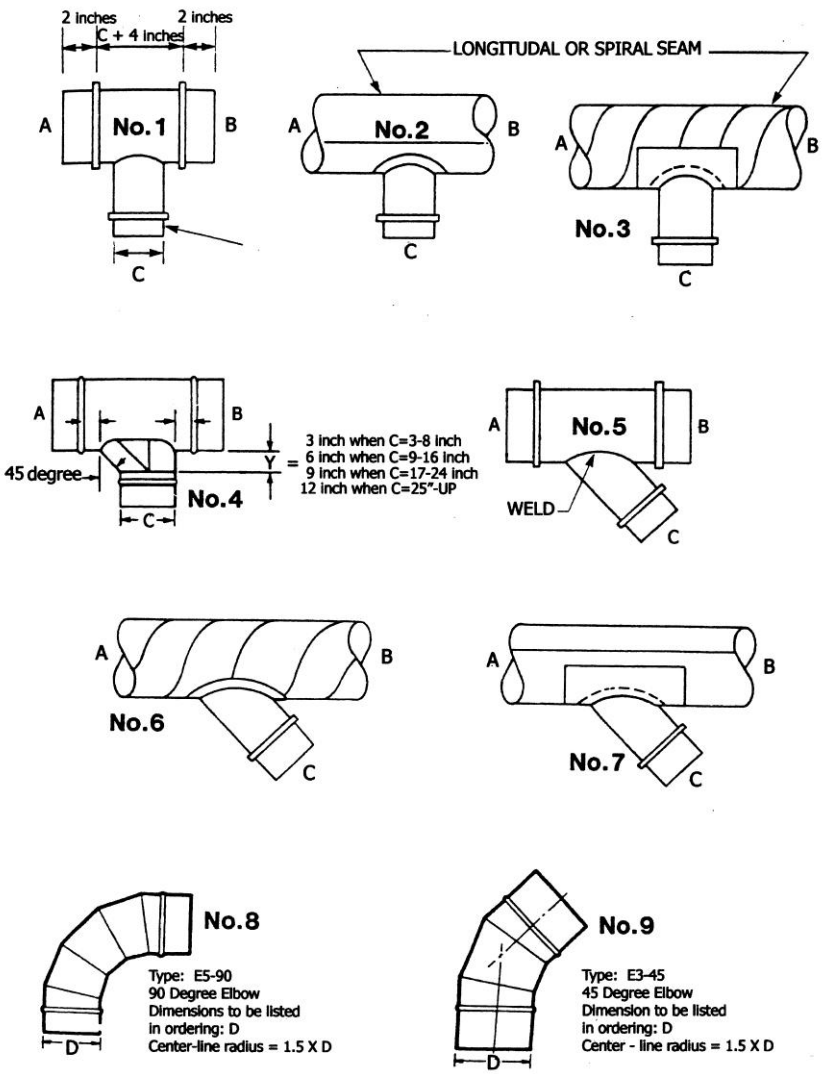

90 Degree Tees, Laterals & Elbows

1. 90 Degree Tee Fitting
2. 90 Degree Tap
3. 90 Degree Saddle Tap
4. 90 Degree Tee - Oval to Rd
5. 45 Degree Lateral Fitting
6. 45 Degree Lateral Tap
7. 45 Degree Lateral Saddle
8. E5-90 90 Degree Elbow
9. E3-45 45 Degree Elbow

FDS 0507

Number and Description	QTY.	**A**	**B**	**C**	**D**